Battioni ®
Pagani

GARDA 6500 (540 rpm) WITH MECHANICAL SEAL
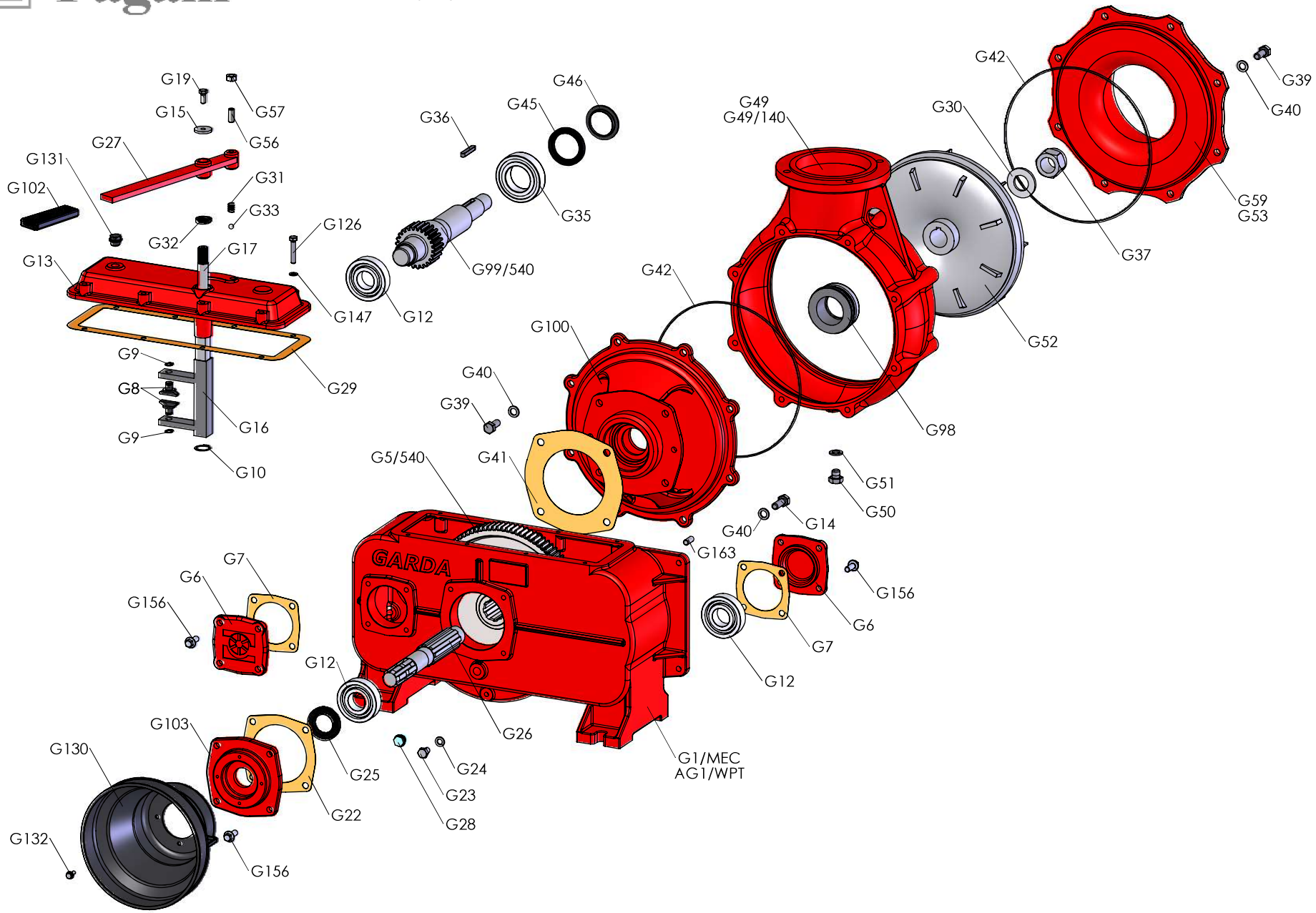
Rev. 0 - 01/05/2021